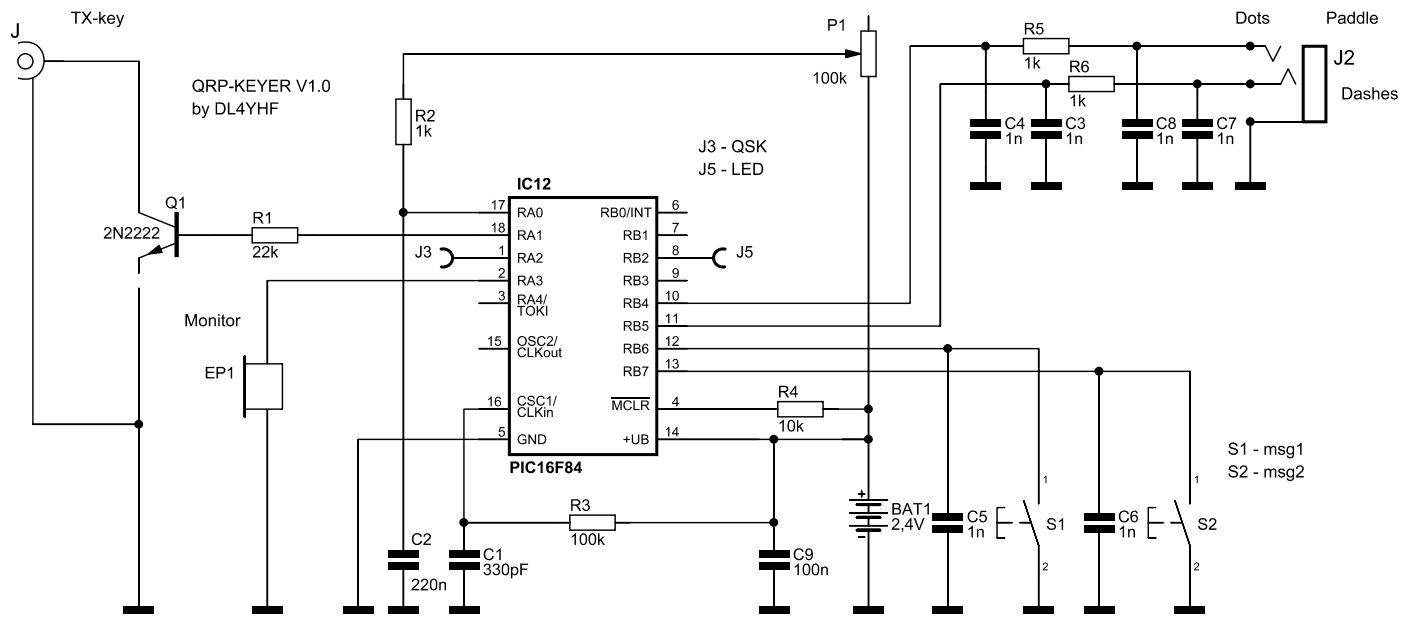
TX-key
J
QRP-KEYER V1.0
by DL4YHF
Q1
2N2222
R1
22k
Monitor
EP1
R2
1k
C2
220n
C1
330pF
IC12
RA0
RA1
RA2
RA3
RA4/
TOKI
OSC2/
CLKout
CSC1/
CLKin
GND
RB0/INT
RB1
RB2
RB3
RB4
RB5
RB6
RB7
MCLR
+UB
PIC16F84
J3
J5
J3 - QSK
J5 - LED
R3
100k
R4
10k
C9
100n
P1
100k
BAT1
2,4V
C5
1n
S1
C6
1n
S2
S1 - msg1
S2 - msg2
R5
1k
R6
1k
C4
1n
C3
1n
C8
1n
C7
1n
Dots
Paddle
J2
Dashes